SSM-3

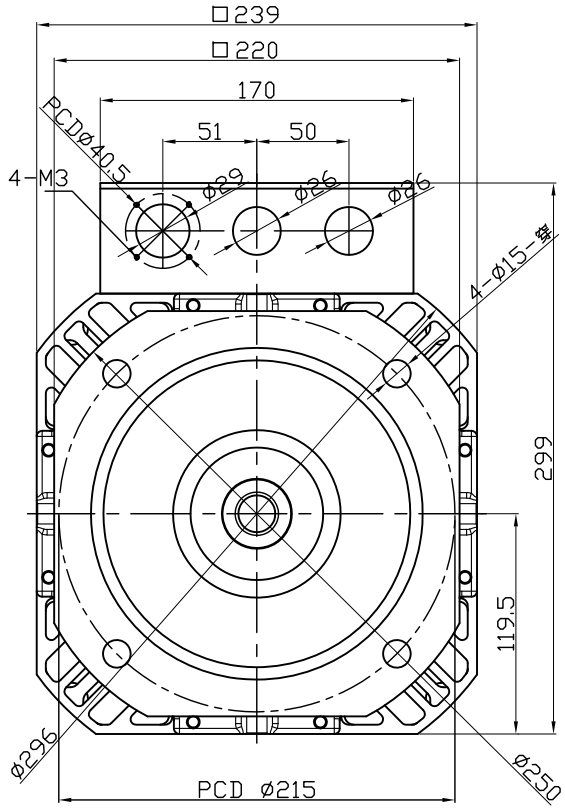

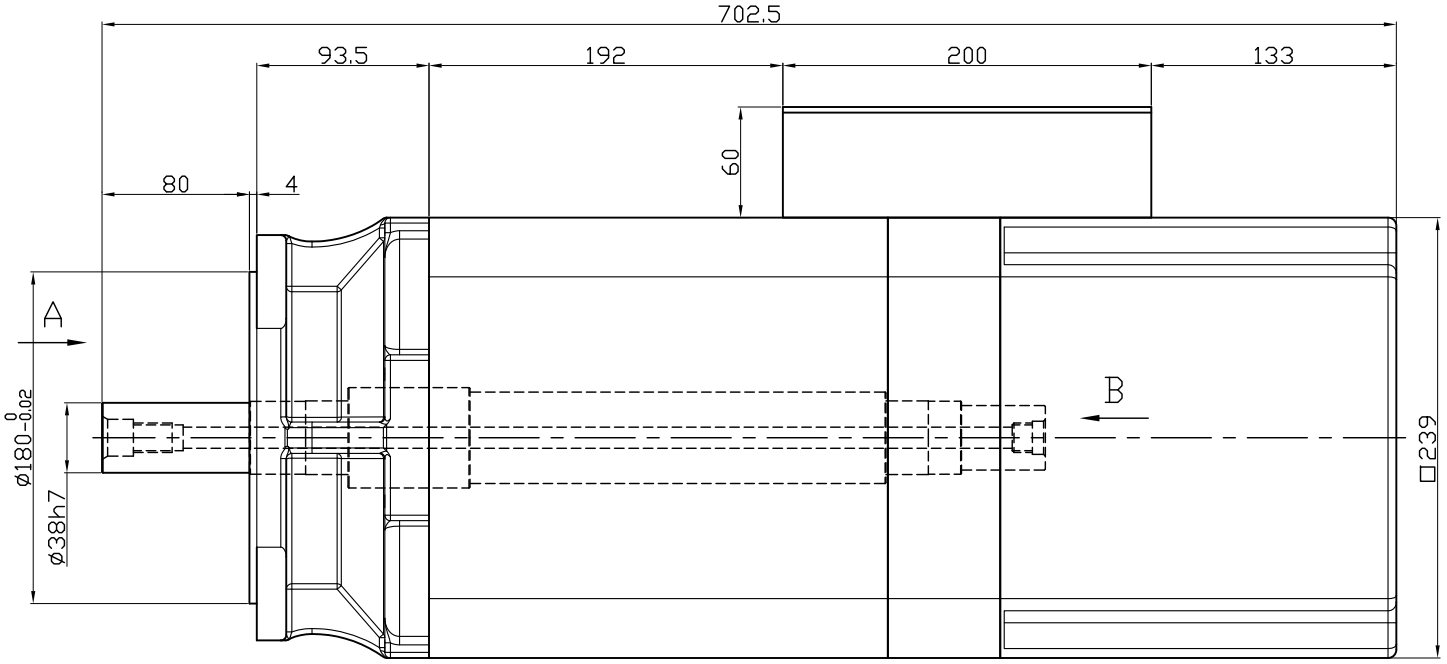

MOTOR POWER : 3HP

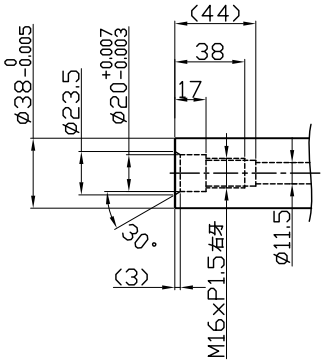

A view

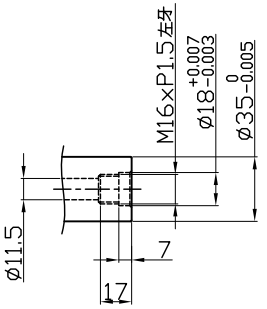

B view